REVISIONS					
ZONE	REV	C/N	DESCRIPTIONS	DATE	APPROVED

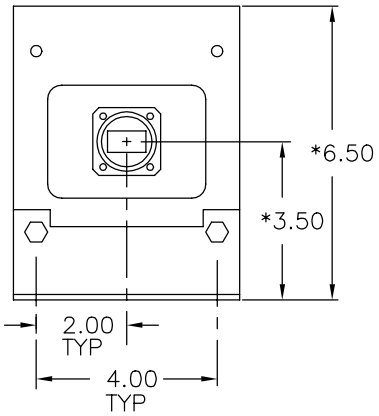

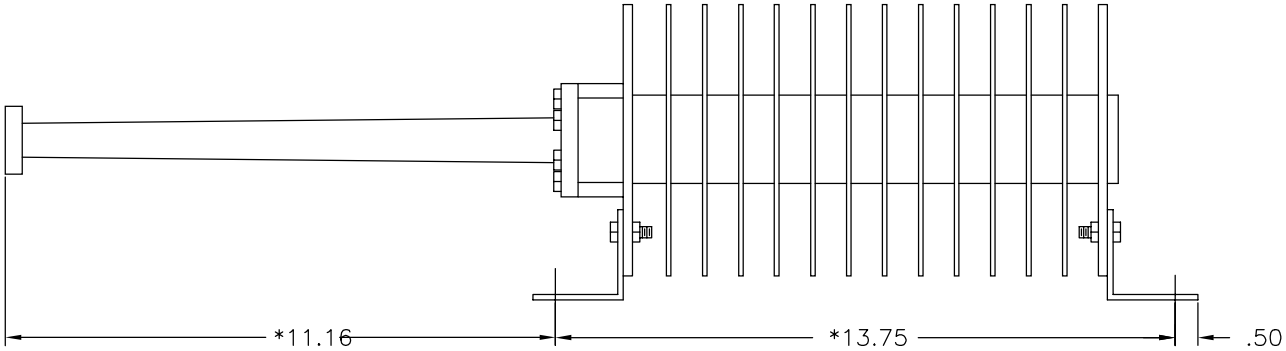

* STANDARD MOUNTING
REF. ONLY

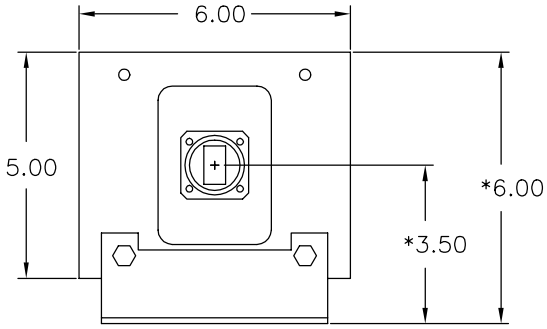

NOTES:

1) ALL MOUNTING FOOT INFORMATION IS FOR DESIGN REFERENCE ONLY. ACTUAL DISTANCES MAY VARY DEPENDING ON FOOT DESIGN. DESIGN SHOWN IS STANDARD. SEE ATTACHED FOOT DWG. FOR MANUFACTURING DETAILS, IF APPLICABLE.

SPECIFICATIONS

FREQ.	13.5–14.5 GHz
VSWR	1.10:1 MAX.
POWER	3.0 KW AVG.
COOLING	CONVECTION

FLANGE OPTIONS

PART NO.	FLANGE TYPE
DL75–3KW–1	WR75 SQ/FLAT
DL75–3KW–2	WR75 SQ/GROOVED
DL75–3KW–3	CPR75G

ITEM	PART NUMBER	DESCRIPTION	REMARKS	REF DES
QTY REQ	LIST OF MATERIALS			

NEXT ASSEMBLY	USED ON
APPLICATION	

UNLESS OTHERWISE SPECIFIED DIMENSIONS ARE IN INCHES TOLERANCES ARE

FRACTIONS	2 PL DEC	3 PL DEC	ANGLES
± 1/64"	± .010"	± .005"	± ~

MATERIAL

FINISH: HIGH TEMP BLACK

MANUFACTURING PRACTICES IN ACCORDANCE WITH SPECIALTY MICROWAVE

DRAWN BY: C. HENSEL — DATE: 12/10/98

DRAFTING RELEASE

PROJECT NO

CONTRACT NO

SPECIALTY MICROWAVE APPROVAL

CUST APPROVAL

SPECIALTY MICROWAVE CORPORATION
RONKONKOMA, N.Y. 11779

DUMMY LOAD
WR75 / 3KW

SIZE: A — DWG NO: DL75–3KW–( ) — REV: –

SCALE FIT — WT — SHEET 1 OF 1