THIS INFORMATION DISCLOSED HEREIN WAS ORIGINATED BY AND IS THE PROPERTY OF ALGA MICROWAVE AND EXCEPT FOR USES EXPRESSLY GRANTED TO A SECOND PARTY, ALGA MICROWAVE RESERVES ALL PATENT, PROPRETARY, DESIGN, USE, SALE, MANUFACTURING AND REPRODUCTION RIGHTS THERETO.
THIS DOES NOT APPLY TO ANY VENDOR PARTS.

REVISIONS

REV.#	E.C.R.	DATE	APPROVED
A	INITIAL RELEASE	Oct 29, 07	

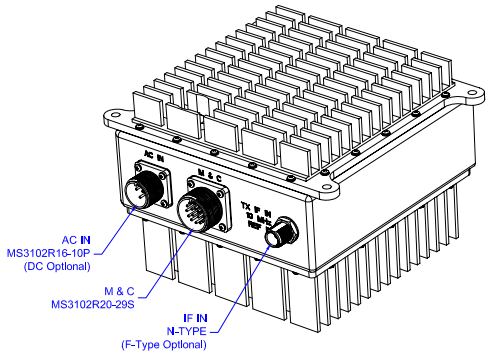

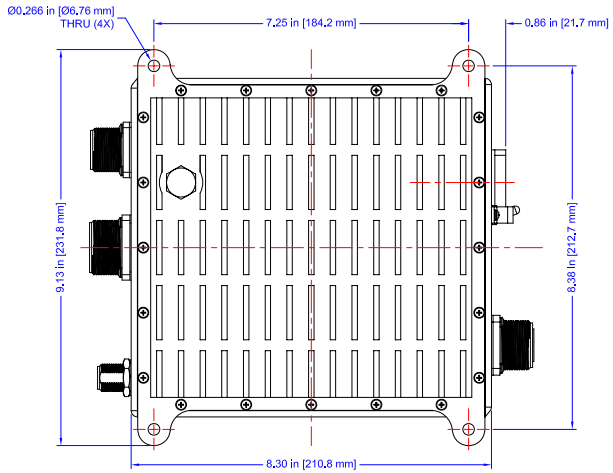

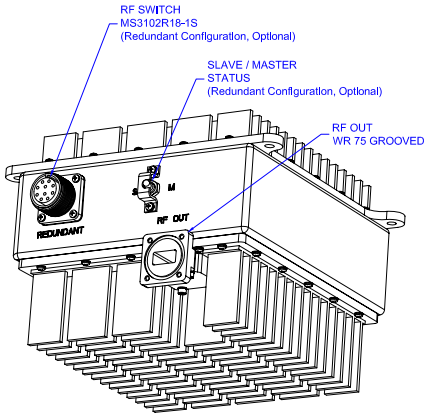

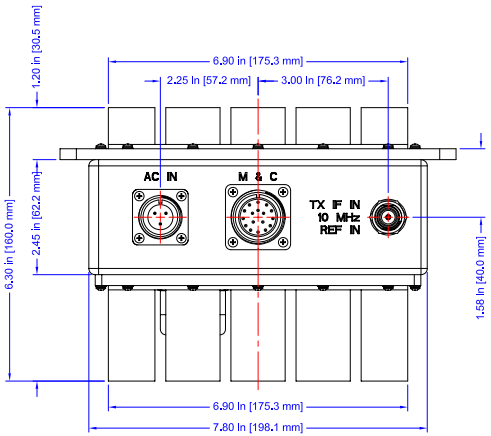

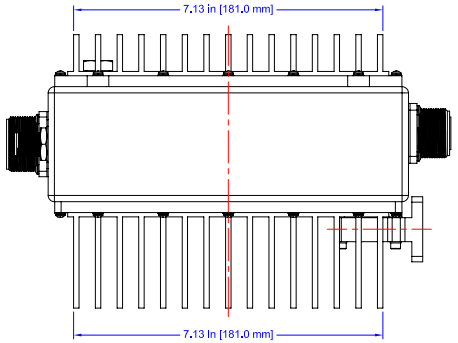

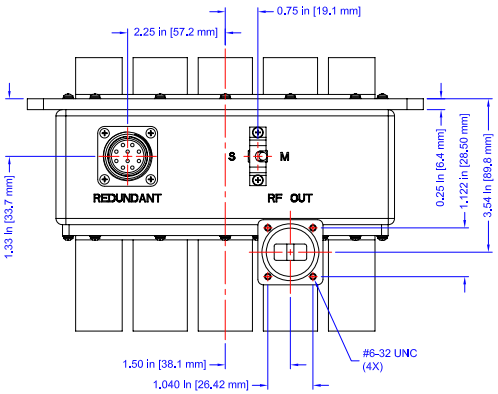

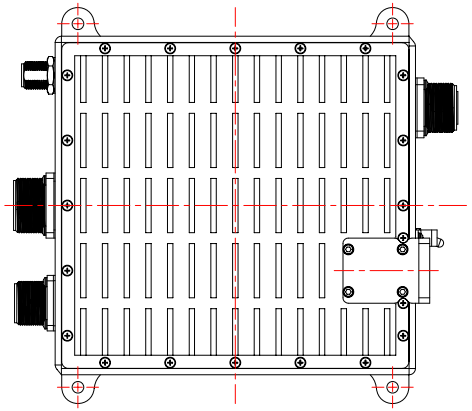

SPECIFICATION:

SEE SPECIFICATION TS-ABOX-KU-16N
WEIGHT: 15 Lbs [6.8 Kg]

*SPECIFICATION IS SUBJECT TO CHANGE WITHOUT NOTICE

THIS IS A PRELIMINARY DRAWING

PART DASH NO.	NEXT	FINAL	NEXT ASSY	USED ON
	QTY REQD PER ASSY		APPLICATION	

UNLESS OTHERWISE SPECIFIED
DIMENSIONS ARE IN INCHES
TOLERANCES ARE:
DECIMALS .X±.01 DEGREES
.XX±.005 .XXXX±.001 ± 0°30'
.XXX±.002 .XXXXX±.0005
DO NOT SCALE DRAWING

DRAWN	MBourgoin	Oct 30, 07
CHECKED	A.Y.	
ENGR	A.Y. / M.B.	
APPROVED	A.Y.	

ALGA MICROWAVE
2109, St-Regis; Dollard Des Ormeaux; QC H9B 2M9; CANADA
Tel. 514-683-6113; FAX 514-683-3312; www.alga.ca

TITLE
16W KU-BAND BUC (ALGA BOX)
OUTLINED DRAWING

SIZE	CAGE CODE	DWG NO.
C		ABOX-KU-16N

SCALE 1:2 SHEET 1 OF 1